Rijksdienst voor Ondernemend Nederland

OCTROOINUMMER 2012035

Octrooicentrum Nederland verklaart dat op grond van octrooiaanvrage 2012035, ingediend op 30 december 2013, octrooi is verleend aan:

Schrijver Vochtbestrijding B.V. te Homoet

Uitvinder(s): Cornelis Hendrikus Theodorus Johannes Schrijver te Castelldefels, Spanje.

voor: Device for extracting moisture from a wall.

Aan dit bewijs is een exemplaar van het octrooischrift gehecht met nummer 2012035 en dagtekening 1 juli 2015.

De maximale beschermingsduur van dit octrooi loopt tot en met 29 december 2033.

Uitgereikt te Den Haag, 8 juli 2015.

Octrooicentrum Nederland

mw. C.M.A. Streng

(19) Octrooicentrum Nederland

(11) 2012035

(12)C OCTROOI

(21) Aanvraagnummer: **2012035**

(22) Aanvraag ingediend: **30.12.2013**

(51) Int.Cl.:
E04B 1/70 (2006.01)

(43) Aanvraag gepubliceerd:
-

(47) Octrooi verleend:
01.07.2015

(45) Octrooischrift uitgegeven:
08.07.2015

(73) Octrooihouder(s):
Schrijver Vochtbestrijding B.V. te Homoet.

(72) Uitvinder(s):
Cornelis Hendrikus Theodorus Johannes Schrijver te Castelldefels (ES).

(74) Gemachtigde:
ir. H.V. Mertens c.s. te Rijswijk.

(54) **Device for extracting moisture from a wall.**

(57) The present invention relates to a device (10) for extracting moisture from a wall (12), the device configured to be positioned in a hole, the device comprising:
- a front part which defines two openings (16), the openings being configured to act as an air intake and an air exit,
- a chamber which defines an inner space, wherein an air flow channel (24) for a main air flow (26) extends through the inner space between the air intake and the air exit,
- a housing (28) which forms a housing wall (30), wherein the air flow (26) that flows through the air flow channel (24) carries off moisture,
characterized in that
the device comprises at least one partition wall (60;60A) which divides the chamber into a first chamber part (22A) which is in open connection with the outside and a second chamber part (22B) which is substantially closed.

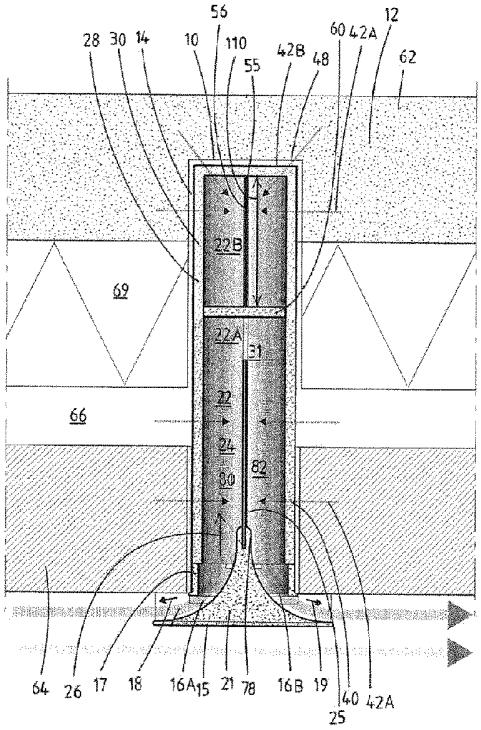

NL C 2012035

Dit octrooi is verleend ongeacht het bijgevoegde resultaat van het onderzoek naar de stand van de techniek en schriftelijke opinie. Het octrooischrift wijkt af van de oorspronkelijk ingediende stukken. Alle ingediende stukken kunnen bij Octrooicentrum Nederland worden ingezien.

P31686NL00/WHA

Title: Device for extracting moisture from a wall

Field of the invention

The present invention relates to a device for extracting moisture from a wall or similar structure of a house or building. By extracting moisture from the wall or similar structure, the device regulates the humidity and reduces humidity problems.

Description of the prior art

Devices for extracting moisture from a wall or similar structure are known per se. EP0829587A1 (hereinafter: EP587) discloses an earlier device by the same inventor as the present invention.

EP587 discloses a device for extracting moisture from a wall or similar structure. The device, see in particular figure 1 of EP587, consists of air guide means 7 which can be applied in a hole 8 in a wall 2. The device defines an air guide channel 9 between two openings 10 - 11, which extend in different directions outside the wall 2. The air that flows through the air guide channel 9 carries off moisture originating from the wall 2. This device is characterized by means 13 which form a cover between the air guide channel 9 and a cavity 5, possibly present in the wall 2 or similar.

The device of EP587 is suitable to remove moisture from the wall, including extracting moisture from a cavity which exists between an inner wall and an outer wall. The cover 13 between the air guide channel and the cavity 5 in the wall is permeable to water but forms a seal against air.

NL2007920 (NL2007920) discloses a further device for extracting moisture from a wall of a building. The element comprises a pad 10 of a heat-insulating material at the back end of the element, see figure 2. The pad 10 is positioned against the inner wall of a cavity. The element further comprises grooves 81 for improving the moisture removal capacity.

Analysis and developed insights

In the present invention it was recognized that the required moisture removing capacity of such devices may vary widely in dependence of the circumstances in which they are applied.

For instance, a wall that is moist may initially require a high moisture removing capacity, but once the wall has been dried sufficiently, this capacity can and should be lower. A lower moisture removing capacity may results in a lower heat loss of the building, which lowers the costs of heating.

Furthermore, the type of wall which is encountered may vary widely. Some walls have a cavity and other walls do not. The cavity may be partially or wholly filled with heat insulation or may be completely empty. The heat insulation may be fitted at the time of construction of may be provided in a later upgrade operation. Various kinds of heat insulation are encountered in cavities. In addition or alternatively, walls may also be covered with heat insulation on the inside, and the heat insulation may be of various kind of materials.

Some walls are made from masonry, other walls from concrete, and yet other walls are form natural stone or another material.

Even in a same building, local conditions in the wall may be different. In some places, damp may rise from the foundation, in other places this does not occur. Some parts of a wall may be moist as a result from leakage, other parts are drier. The side which faces the prevailing wind direction has different moisture conditions than the other sides.

Furthermore, the prevailing temperatures on the outside may vary enormously. In the south of Europe, Mediterranean climates occur, and the average outside temperature may lie between 15 and 25 degrees. In Scandinavia, the average outside temperatures are much lower. In other countries yet other climate conditions may occur. The absolute and relative humidity of the air may also vary significantly.

In a cold climate, there is a large temperature difference between the outside and the inside. If the cold of the outside would reach the inside of the inner wall, an uncomfortable cold (or loss of heat) would occur inside the house. This may happen in the north of Europe. In other words, there is an excess of a temperature difference between the outside and the inside.

However, in a warm climate, the difference between the outside temperature and the inside temperature is substantially smaller. Here, the full temperature difference may be necessary for sufficient moisture removal. This condition may occur in the south of Europe.

Furthermore, it was recognized that the wall itself has a temperature gradient, which ranges from almost the outside temperature on the outer side of the wall to almost the inside temperature on the inner side of the wall. The moisture removing device works on the principle of providing a cold spot which attracts moisture and removes the moisture from this cold spot with air.

The insight was developed that if the moisture removing device itself has a single temperature throughout the device, it works very well on the inside of the wall, but may not work very well on the outside of the wall. More in particular, because the device extends into the wall, the device extends into a part of the wall which is heated from the inside. The heat coming from the inside may heat up the entire moisture removing device, including an outer portion of the moisture removing device. This results in a situation wherein the outer part of the device becomes warmer than the outer portion of the wall which surrounds it. In such a situation, the moisture removing device locally no longer forms a cold spot and locally stops functioning as a moisture removal device, or at least functions to a lesser degree.

A further problem occurs in that when the cavity between an inner and outer wall is filled with thermal insulation, humidity problems may occur in the cavity. The moisture in the cavity can result in various phenomena, such as repeated condensation in different places within the cavity. The moisture inside the cavity has the tendency to move about. The moisture condenses and appears as droplets on the thermal insulation. The moisture may evaporate again and move through the cavity to a different location where it again condenses and re-appears as droplets.

EP587 and NL920 have as a stated goal that they are capable of removing moisture from a cavity which exists between an inner wall and an outer wall, but the capacity to do so was found to be quite low.

Further, in newly built houses, there are often very few cracks which result in ventilation of the living space. This is due to the improved quality of construction and the improved quality of the various parts which are used, such as frames for doors and windows. As a result, newly built houses often have less ventilation than required, which results in a lack of fresh air. This lack of fresh air often deteriorates the moisture situation. Moisture in the living environment cannot escape because of the lack of ventilation. If the living environment is used intensively, this problem can be more serious. The insight was developed that neither the device of EP587 nor the device of NL2007920 succeed very well in removing moisture from the living space.

To make matters more complex, the insight was developed that humidity problems in the living space due to lack of ventilation may be aggravated by a layer of insulation which is often applied on the inside of the wall. This is often done in a retrofit operation to decrease the heat loss and associated costs of heating. Although the heat loss is indeed reduced, the layer of insulation itself prevents humidity to exit from the living space. This creates a variety of problems. The insight was developed that the devices of EP587 and NL2007920 do not work very well in preventing these humidity problems. In particular walls without a cavity and with insulation attached to the inside of the wall suffer from moisture problems.

Furthermore, the use of a house or building may also vary. In particular in rented houses the users often close ventilation means in order to reduce cold or draft. This deteriorates the moisture problems, because moisture is removed with draft. Furthermore, double glazing may be present or not and also significantly influence the moisture situation.

Further, it was found that the installation of the known moisture removal device itself takes quite a long time. It was further recognized that even though a solution to accelerate the installation is available, i.e. by using circular holes and circular moisture removal devices, this solution itself creates other problems related to the appearance of the moisture removal devices from the outside.

Furthermore, it was recognized that the moisture removing devices of the prior art may become a nest for animals or insects such as spiders or may become a gathering place for dust and dirt. This hampers the functioning of the moisture removal device.

All in all, the various phenomena are quite complex. The complexity is increased even further by the fact that in practice it is not always clear what the source of the moisture is. As mentioned, the moisture may be generated inside the house or building. Alternatively, the moisture may have been trapped once and enclosed in a space without exit. Alternatively, the moisture may rise from the ground into the wall via capillary action. The moisture may also be a result from leakage or from condensation of moist from an unexpected cause.

For instance, if rainwater is not discharged from a terrace, a puddle is formed on the terrace which forms a cold spot. If the terrace is located above a room, the ceiling of the room becomes cold and attracts moisture from the inside. This moisture condenses against the ceiling, giving the impression of a leak in the ceiling, where no leak exists.

The various aspects discussed above can occur in combination, resulting in compounded effects on the moisture situation and even more complexity.

The insight was developed that the devices of EP587 and NL2007920 do not succeed in meeting these challenges and are based on a rather incomplete understanding of the various phenomena which occur and of the interdependence of these phenomena.

The invention

The invention aims to solve at least one of the problems mentioned above.

The invention provides a device for extracting moisture from a wall or similar structure, the device being configured to be positioned in a hole in said wall, the device comprising:

- a front part which defines two openings which extend in different directions the openings being configured to act as an air intake and an air exit,
- a chamber which defines an inner space, wherein an air flow channel for a main air flow extends through the inner space between the air intake and the air exit,
- a housing which forms a housing wall of the chamber, the housing being connected to the front part,

wherein the main air flow that flows through the air flow channel carries off moisture from the wall,

characterized in that

the device comprises at least one partition wall which divides the chamber into a first chamber part which is in open connection with the outside via the openings and a second chamber part which is substantially closed.

The partition wall reduces the heat loss of the device and creates different temperature zones inside the device. This improves the moisture removing capabilities near the outer side of the wall, because here the temperature of the device will be lower due to the fact that the partition wall prevents heat from inside from the building from warming up the entire device.

It allows the device to completely penetrate a wall without losing the moisture removal capability for the outer part of the wall, or at least to penetrate the wall deeper than known devices. In this way the device can remove moisture better than known devices across the width of the wall.

The partition wall also allows the device to penetrate the entire wall or at least deeper than known devices, without creating excess heat loss. This allows the device to be used to remove

moisture from inside the living space.

Said partition wall may be movable in a longitudinal direction of the device in order to vary the size of the first and second chamber part. This creates versatility, and makes the device customizable to varying conditions and demands.

The partition walls extend substantially transverse to a main longitudinal direction and can be indicated as a transverse partition wall.

In an embodiment, the device further comprises an intermediate part which interconnects the housing and the front part, wherein the intermediate part is separate from the front part. The intermediate part allows a more cost-effective production, and/or better customization of the front part to match the colour of the building. The intermediate part may also provide easier placement and/or a better sealing of the hole around the device in order to prevent ventilation.

In an embodiment, the front part is connected to the rest of the device via a releasable coupling which allows the front part to be removed by a user, wherein in particular the front part is connected to the intermediate part via the releasable coupling.

The releasable coupling allows maintenance, inspection, cleaning and/or repositioning of the partition wall.

In an embodiment, the device further comprises a flow controller for varying the airflow after installation of the device in a wall. The flow controller may be formed by a central air guide having a variable position.

The flow controller makes the device more versatile so that it can be customized to local requirements or requirements which vary in time.

In an embodiment, the device further comprises a second partition wall which together with the first partition wall divides the chamber into a first chamber part, a second chamber part and a third chamber part, and wherein in particular the first and second partition wall are movable.

This embodiment provides an advantage of creating a cold spot throughout the entire width

of a wall.

In an embodiment, the device further comprises a first housing part and a second housing part which are coaxially arranged. This embodiment allow an easy adjusting of the length of the device to various widths of the wall. The first and second part may be two short parts, a long part and a short part or two long parts. Each combination results in a different total length.

A ring of a different material than the material of the housing parts may be provided between the first and second housing parts. The ring may be manufactured from a heat-insulating material. The ring may be provided with air channels which extend through the ring and allow moisture to travel from the second housing part to the first housing part.

In an embodiment, the housing wall is not only permeable to moisture but also comprises air channels which extend through the housing from the outside to the inside in order to let an air flow permeate from the outside of the device through the housing wall into the chamber, and wherein the air channels have an average diameter of at least 0.5 mm.

It was recognized that current devices for extracting moisture, such as the device disclosed in EP587, are very limited when it comes to removing moisture from a cavity. The device of EP587 requires moisture in the cavity to condense on outside of the housing wall. This condensed moisture may then travel through the housing wall by the capillary action and reach the chamber where it is re-vaporized by the main air flow and discharged with the main air flow through the air exit. In the device of the present invention, no condensation is required for removal of moisture from the cavity. The moisture can stay in vapour form and travel with the permeable air flow through the housing wall. When the permeable air flow reaches the chamber, it merges with the main air flow and is discharged through the air exit. The present invention provides an improvement in removing moisture from cavities which are filled with insulation. The permeable air flow takes along with it moisture inside the cavity.

The size of the pores which form the air channels may be chosen at the manufacturing stage of the housing. In this way the air permeability of the housing can be controlled at the manufacturing stage.

In an embodiment, the housing is provided with an endplate at an end thereof, wherein the endplate comprises air channels which extend through the end wall in order to let a second

permeable flow of air flow through the endplate into the chamber, and wherein the air channels have an average diameter of at least 0.5 mm. The endplate may be manufactured from the same material as the housing. The endplate may be integral with the housing.

The endplate allows moisture removal from inside the living space in addition to moisture removal from the wall, and allows a deeper penetration of the device into the wall, which improves moisture removal from an inner part of the wall.

In an embodiment, the housing has a circular cross-section and wherein the front part has a square cross-section or a rectangular cross-section, wherein in particular the intermediate part provides a transition from a circular cross-section to a rectangular cross section.

This combines a rapid installation by drilling a round hole with a nice appearance of the device. The device can have a similar form and colour as the bricks in a wall.

In an embodiment, in front view the front part overlaps the housing and any cement with which the housing is connected to the wall. This improves the visual characteristics of the device in that the cement is invisible from the outside. The cement used to fix the device often has a different appearance from the cement of the wall itself.

The present invention further relates to a wall of a house or similar structure, the wall comprising a hole and a device according to claim 1, the device being positioned in the hole.

In an embodiment, the wall is a double wall comprising a first, inner wall, a second, outer wall and a cavity between the inner and outer wall, and wherein the housing wall comprises air channels which extend through the housing and connect the cavity with the chamber, so that in use a permeable air flow flows from the cavity through the housing wall into the chamber.

The air channels allow a better moisture removal from the cavity than known devices achieve.

In an embodiment, the material of the housing is pervious concrete, i.e. concrete with an open structure. Pervious concrete was found to enable good moisture removal from a cavity. Pervious concrete is a concrete in which a substantial part of the fine aggregates (i.e. the sand) has been left out. In an embodiment, 25 to 40 percent of the volume may consist of gaps. At least 25

percent of the volume may consist of interconnected gaps.

It was recognised that the material of the housing of existing devices such as the device of EP587 is a limiting factor in the lifespan of these devices. By using the above mentioned material for the housing, not only the humidity is improved, but also the lifespan is considerably increased.

The material of the housing may have a high thermal insulation value. The material of the housing may have a constant grain size. Generally, the material of the housing is durable and strong.

The material of the housing may be a natural material which can be produced in a sustainable manner.

In an embodiment, the device has an endplate at an end thereof, wherein the endplate comprises air channels which extend through the end wall in order to let a second permeable air flow flow through the endplate into the chamber, and wherein the air channels have an average diameter of at least 0.5 mm. This embodiment allows good moisture removal from the living space or from an inner part of a wall.

In embodiment, the endplate is manufactured from the same material as the housing.

In a further embodiment, a layer of insulation is connected to the wall, and the insulation has an opening near an end of the device so that air containing moisture can flow through the opening in the insulation and continue as a permeable air flow through the endplate and into the chamber. In this way moisture from inside the living space can advantageously be removed.

In an embodiment, a panel such as a gypsum panel comprising the layer of insulation is connected to the inside of the wall, the insulation engaging the wall, wherein the device extends through the wall, wherein the opening is provided in the insulation so that an end of the device directly engages the panel.

The present invention further relates to a method of improving the damp situation in a house or similar structure, the method comprising:

- creating a hole in a wall of the house,
- inserting the device according to claim 1 in said hole,

- removing moisture from the wall.

The method provides substantially the same advantages as the device.

In an embodiment, the device is initially installed with a partition wall in a first position or without a partition wall, and wherein after a certain time period the partition wall is moved to a second position, removed or inserted, such that in the second time period the device has a different moisture removing capacity than in the first time period.

In this way the device can be adjusted to varying requirements and circumstances.

In an embodiment, the device is initially installed with a first partition wall in a first position and second partition wall in a second position, and wherein after a certain time period at least one partition wall is moved or removed. In this way the device can be adjusted to varying requirements, in particular to a wall that becomes dry over time.

In an embodiment, the device comprises an intermediate part which interconnects the housing and the front part, wherein the intermediate part is separate from the front part, wherein the housing is manufactured from a ceramic material and wherein the front part and the intermediate part are manufactured from a synthetic material, and wherein the housing is fixed to the wall with cement and the intermediate part is fixed with a different connection method.

This embodiment provides amongst others the benefit of a good seal to prevent ventilation of the cavity.

In an embodiment of the method, the front part is connected to the rest of the device via a releasable coupling which allows the front part to be removed by a user, wherein in particular the front part is connected to the intermediate part via the releasable coupling, and wherein the front part is removed from time to time for:

- inspection of the interior,
- cleaning the interior and/or for
- repositioning the at least one partition wall inside the chamber.

In an embodiment, the device comprises a flow controller for varying the airflow after installation of the device in a wall, wherein in particular the flow controller is formed by a central air

guide having a variable position, and wherein after a certain time period the air flow is adjusted with the flow controller in order to increase or decrease the moisture removing capacity. Advantageously, the airflow can be adjusted to varying requirements.

In an embodiment, an air flow flows through the air channels in the housing wall from the cavity in the wall into the chamber, thereby removing moisture from the cavity. It is noted that device of the prior art allow moisture to flow through the housing wall via the capillary action but at the same time block a direct air flow. It was found that a better result can be obtained with the air channels.

In an embodiment, the housing is provided with an endplate, wherein the endplate comprises air channels in order to let a second permeable flow of air flow from the outside of the device through the endplate into the chamber, wherein a wall comprises a panel, in particular a gypsum panel, which is connected to the inside of the wall, wherein the hole extends all the way through the wall, wherein the endplate of the device directly engages the panel, and wherein moisture is removed from the panel by a second permeable air flow which flows through the endplate.

It was further found that many of the features disclosed above can provide a substantial improvement to known moisture removal devices independent of the partition wall of claim 1, i.e. without the partition wall. Therefore, the present invention further relates to a device for extracting moisture from a wall or similar structure, the device being configured to be positioned in a hole in said wall, the device comprising:

- a front part which defines two openings which extend in different directions, the openings being configured to act as an air intake and an air exit,
- a chamber which defines an inner space, wherein an air flow channel for a main air flow extends through the inner space between the air intake and the air exit,
- a housing which forms a housing wall of the chamber, the housing being connected to the front part,

wherein the main air flow that flows through the air flow channel carries off moisture from the wall, the device comprising one or more of the features of claims 2 - 11.

The same applies to the wall and the device, i.e. the wall of claim 12 and the method of claim 16 can also be provided with a device which does not comprises the partition wall but comprises one or more of the other features of the claims.

These and other aspects of the invention will be more readily appreciated as the same becomes better understood by reference to the following detailed description and considered in connection with the accompanying drawings in which like reference symbols designate like parts.

Brief description of the figures

Figure 1 shows a cross-section in top view of a first embodiment according to the invention.

Figure 2 shows a cross-section in side view of the embodiment of figure 1, taken along the lines II in figure 1.

Figure 3 shows a cross-section in an isometric view of the embodiment of figure 1.

Figure 4 shows a front view of a wall comprising several devices according to the invention

Figure 5 shows a front view of a wall comprising several different embodiments of the device according to the invention.

Figure 6 shows an exploded isometric view of a device according to the invention.

Figure 7 shows a detail in side view of the connection between a front part, an intermediate part and a housing.

Figure 8 shows a detail similar to figure 7, wherein the front part has a different position.

Figure 9A shows a cross-section in an isometric view of another embodiment of the invention.

Figure 9B shows a cross-section in an isometric view of the embodiment of figure 9A in a wall having a cavity.

Figure 10 shows an isometric view of a detail of the embodiment of figure 9B.

Figure 11 shows a cross-section in an isometric view of another embodiment of the invention.

Figure 12 shows an exploded isometric view of another embodiment of the invention

Detailed description of the figures

Turning to figures 1, 2 and 3, a device 10 for extracting moisture from a wall 12 or similar structure is shown. The wall 12 comprises an inner wall 62, an outer wall 64 and a cavity 66 between the inner wall and the outer wall. The cavity is partially filled with thermal insulation 69. The wall 12 may also be a solid wall.

The device is configured to be positioned in a hole 14 in said wall. The device comprises a front part 15 which defines two openings 16 which extend in different directions 18, 19. The front part may be manufactured from a glass fibre reinforced composite or another suitable material. The front part 15 comprises a central air guide 21 which projects outwardly from the wall. The front

part may mimic the appearance of a brick.

The central air guide defines the air intake 16A and the air exit 16B. The central air guide has a curved shaped to create a fluent air guide and to create dynamic overpressure on the side of the air intake 16A and dynamic underpressure on the side of the air exit 16B, thereby increasing the speed of the air flow through the device.

The air intake 16A and the air exit 16B have a same shape and are exchangeable in use, the function depending on the direction of the wind. The speed of the air flow within the chamber is considerable, and typically higher than the speed of the wind which flows along the openings, i.e. along the outside of the wall.

A housing 28 which forms a housing wall 30 of the chamber is connected to the front part 15 via an intermediate part 17. The housing wall 30 is air permeable. The air permeable housing 28 defines air channels 40 which extend through the air permeable housing wall 30 from the outside to the chamber 22 of the chamber, the air channels being configured to in use let a permeable air flow 42A flow from the outside 44 of the device through the housing wall into the chamber, where the permeable air flow merges with the main air flow.

The permeable air flow allows in particular the extracting of moisture from a cavity 66 of a wall 12 comprising an inner wall 62, an outer wall 64 and a cavity 66 between the inner wall and the outer wall. The cavity may be filled with thermal insulation 69. The air channels connect the cavity with the inner region 22 of the chamber, so that in use a permeable air flow flows from the cavity through the air channels into the chamber.

The housing may be manufactured from a porous material such as pervious concrete which defines air channels having an average diameter which lies between 0.05 mm and 1 mm and extend through the housing wall.

The housing defines a chamber 22 therein. The device further comprises a partition wall 60 which divides the inner space in a first chamber part 22A and a second chamber part 22B. The central air guide 21 projects into the chamber.

The partition wall 60 extends transverse to the longitudinal direction of the device. The partition wall 60 is manufactured from a ceramic material. The partition wall 60 may substantially

close the second chamber part 22B, so that the second chamber part 22 is not fluidly connected to the first chamber part 22A. A groove 55 extends longitudinally along the inside of the housing wall. A spacer element 56 is positioned in the groove 55 in order to keep the partition wall 60 at a defined distance from the end wall 46. When a spacer element of a different length is used, the partition wall can be positioned at a different distance from the end wall.

The air intake 16A and air exit 16B are channels extending through the front part 15 and being in open communication with the first chamber part 22A.

The cross section of the inner space is circular, i.e. the chamber 22 has a substantially cylindrical shape. An air flow channel 24 for a main air flow 26 extends through the first chamber part 22A between the air intake and the air exit. A partition wall 25 extends in a longitudinal direction from a rear end 78 of the central air guide 21 further into the chamber, and extends the length of the air flow channel 24. The air flow channel 24 has a general U-shape.

The air flow channel 24 comprises an ingoing part 80 and an outgoing part 82, wherein the flow has respectively an ingoing direction and an outgoing direction. The ingoing direction and the outgoing direction are roughly opposite to one another. The air flow channel 24 comprises a U-turn 31 at the end of the longitudinal partition wall 25, i.e. at the transition between the ingoing part and the outgoing part. The U-turn 31 is located between the end of the longitudinal partition wall 25 and the partition wall 60 which divides the chamber into two chamber parts.

In use, the main air flow 26 flows through the air intake 16A, through the air flow channel 24, carries off moisture from the wall 12, and exits the device through the air exit 16B.

The housing is provided with an air permeable endplate 46 at an end 48 which is opposite to the front part 15. The air permeable endplate defines further air channels 40 which extend through the air permeable endplate from the outside of the device to the inner space of the chamber. The air channels of the endplate connect the inner wall 64 with the inner region of the chamber, so that in use a second permeable air flow 42B flows from the inner wall through the air channels 40 into the chamber.

The air permeable endplate 46 allows a better controlled extracting of moisture from the wall 12 or from the living space inside the house or building. The air channels 40 of the endplate 46 may have an average diameter which lies between 0.05 mm and 1 mm. By varying the size of the

channels, the extracting of moisture may be controlled.

With the device according to the invention, a wall of a house may be completely punctured. This means that the end plate 46 of the device according to the invention may become visible from the inside. The end plate 46 may also puncture the wall of the house, but not the insulation that is attached to the inside of the wall of the house.

The end plate 46 may be mounted flush or substantially flush with the inside of the wall. The endplate may be integral with the air permeable housing. In a different embodiment, the endplate may be a separate part.

In general, a wall becoming moist can be a fast process. The drying of a wall is generally a slow process. It generally takes a long time before a moist wall dries.

The distance between the end wall 46 and the partition wall 60 may variable by the user or by the installing company. This may be executed by taking the front part off the device, removing the partition wall, installing different spacer elements 56 having a different size and re-installing the partition wall. If desired, the movable partition wall can be positioned against the fixed end wall by the user.

The movable partition wall 60 allows the user to control the rate at with which the moisture is removed. This improvement is based on the insight that for houses and other buildings which have just been built, the moisture situation needs to be improved quite quickly. In this situation, the movable end wall will be positioned against or close to the fixed end wall so that the second chamber part is relatively small. The first chamber part is relatively large. The first chamber part is in open connection with the outside and for this reason is relatively cold. The second chamber part is substantially closed or entirely closed and for this reason is warmer than the first chamber part.

The first chamber part creates a cold spot 22A which attracts moisture. The second chamber part 22B is also a cold spot, but a cold spot having a higher temperature than the first cold spot. For this reason the second chamber attracts moisture at a lower rate.

The second chamber has a benefit in that it protects the inner wall from an extreme cold spot which would otherwise be created with a single chamber which is in direct contact with the outside.

When the house or building becomes dry over time, the need to remove moisture remains, but to a lesser extent. In this situation the invention provides the option to reduce the moisture removing capacity of the device by increasing the distance 110 between the fixed end wall and the movable end wall. This increases the size of the second chamber part which has a higher temperature and a lower moisture removing capacity and decreases the size of the first chamber part which has a lower temperature and therefore a higher moisture removing capacity.

This brings along an advantage that the heat loss in the building as a result of the air flow is removed. The second chamber part 22B is warmer than the first chamber part 22A and therefore to a certain degree provides heat-insulation, thereby reducing the loss of heat.

The partition wall itself may be permeable to moisture and allows moisture to travel through the partition wall. The moisture also travels through the wall of the housing in a forward direction, i.e. towards the front where it is colder.

There may be two partition walls as will be discussed below.

The air channels 40 are defined by pores 50 in the chamber wall. The pores are connected to form the air channels. The air channels form a criss-cross network through the housing wall.

The porosity of the air permeable housing wall, and in case of an air permeable endplate, the air permeable endplate, may be at least twenty five percent. It was found in practice that above this limit, the effect of the air channels is in particularly good.

In use, the device 10 is positioned in an existing wall of a house or similar structure. First a hole 14 is made by drilling with a drill to the desired depth and subsequently the device is inserted. The device is fixed with cement. The device 10 may also be positioned during the forming of a brick wall, and be positioned as a brick in the wall during the forming thereof.

Turning to figure 4, the housing 28 may have a rectangular cross-section as is indicated with dashed lines. Multiple devices 10 are provided in the wall at regular distances.

Turning to figure 5, the housing 28 may also have a circular cross-section as is indicated with dashed lines. The front part 15 has a rectangular or square cross-section. This provides the benefit that the hole in the wall can be manufactured with a conventional drill, which allows fast

installation of the device. At the same time, the front part 15 can have the same shape as the surrounding brickwork, making the front part 15 less visible to the eye. This avoids the disadvantage of having circular front parts which is in particular disadvantageous with historic or monumental buildings.

The intermediate part 17 provides the transition from circular to square or rectangular.

Turning to figure 6, the device 10 according to the invention is shown in exploded view. The device comprises the housing 28, an intermediate part 17 and a front part 15. The housing is circular and made from a ceramic material or from pervious concrete.

In both figure 5 and 6, the front part overlaps the contour of the housing and the cement with which the device is connected to the wall. In this way the cement is invisible or less visible. The cement which connects the device to the wall often has a different colour texture or in general appearance than the cement which is present in the rest of the wall. By hiding the cement behind the front part, the appearance of the wall as a whole is improved.

The intermediate part 17 interconnects the front part 15 and the housing 28. The intermediate part 17 provides a transition from the circular cross section of the housing to the square or rectangular cross section of the front part 15. The intermediate part 17 has a circular connector 90 which connects with the housing 28. The circular connector 90 has grooves which enable a solid connection with the housing 28.

The intermediate part 17 has a square or rectangular connector 92 which connects with the front part 15. The connector 92 has a bottom plate and a top plate which project forward and a click coupling 100 which will be discussed in detail further below.

An advantage of the intermediate part 17 is that the installation of the device becomes easier. The housing 28 is installed with cement in the hole in the wall. The intermediate part 17 is connected to the housing once the housing is fixed in place. The intermediate part may be connected to the housing in various ways, for instance with an adhesive connection or with bolts or screws. No cement is needed. This is an advantage because cement is quite difficult to handle.

A further advantage of the intermediate part is that the front part becomes smaller. This makes it easier to provide various front part having different colors which are chosen to match

prevailing colors of masonry. The intermediate part is not visible and can have a general color such as black or white or may be manufactured from a more cost-effective material. Only the front part needs to be customized to the actual color of the wall.

The front part 15 comprises the central air guide 21 which defines a curved intake and a curved exit. The longitudinal wall 25 extends through the intermediate part 17 and fits in a slot 106 at the end 78 of the central air guide 21.

The partition wall 60 is shown in dashed lines.

A sloping roof 120 may be provided above the openings in order to prevent rain from entering through the openings. The lower side 122 of the entrance may also be provided with a slope in order to prevent rain or in general water from flowing into the device.

Turning to figures 7 and 8, the intermediate part 17 is shown to abut a front face of the housing 28. The intermediate part 17 is fixed in place with glue 118 or in another way. The glue 118 acts as a seal. Sometimes, the cement with which the housing is cemented to the wall does not completely close off the hole. Then, the cavity may become ventilated, leading to a substantial heat loss. The glue 118 prevents any leakage around the outside of the device 10 into the cavity of the wall.

The connector 92 for the front part 15 comprises a click coupling 100 comprising two ridges 112 which mate with two indentations 114 in the front part 15. The front part can be clicked onto the intermediate part easily and also be removed easily. This allows easy inspection, cleaning, maintenance and repositioning of the partition wall 25. In particular it allows removal of dirt and insects such as spiders.

The two ridges 112 also allow the front part including the central air guide to be positioned in two different positions. In a first position shown in figure 7 the cross sectional area of the intake 16A and exit 16B is small. In a second position shown in figure 8 the cross sectional area of the intake 16A and exit 16B is larger, resulting in a greater air flow through the device and a greater moisture removing capacity.

The cross sectional area of the intake 16A and exit 16B varies because the central air guide tapers and defines the cross sectional area in cooperation with the intermediate part 17. In the first

position, the central air guide is inserted into the intermediate part further, and the width of the intake and exit is rather small. In the second position, the width of the intake is rather large.

Therefore, the click-coupling 100 has a double function and acts at the same time as a flow controller with which the air flow through the device 10 can be controlled. This allows a same device to be produced and to be tuned to different circumstances and different requirements. Other kinds of flow controllers for varying the air flow are also possible, such as a removable insert which partially obstructs the air flow, or a gate, or by using different front parts having different central air guides

Turning to figure 9, the present invention is installed in a wall 12 without a cavity. The wall 12 comprises a panel 70 such as a gypsum panel which is placed against the inside 74 of the inner wall 62. The panel 70 comprises a layer of insulation 72 which engages the inside 74 of the inner wall 62 and is provided between the gypsum and the inner wall. The device 10 extends all the way through the inner wall. A part of the insulation 72 is removed so that a hole 75 is created.

The end plate 46 comprises small air channels to create air permeability. The endplate 46 extends through the layer 72 of insulation and directly engages the panel 70. The layer of insulation may have a thickness in the range of 30 mm.

The technical effect of engaging the endplate 46 with the panel 70 is that the damp from the interior climate can flow through the air permeable endplate 46 into the chamber 22 without hinder of damp blocking layers. The relative humidity indoor will drop as a result of this and moisture problems inside may be solved.

The device 10 further comprises a first partition wall 60A and a second partition wall 60B. The partition walls 60A, 60B create a first chamber part 22A, a second chamber part 22B and a third chamber part 22C. The second and third chamber parts are not in direct contact with the outside.

The three separate chambers have an advantage in that the heat loss from the building is reduced. Furthermore, the temperature in the different chambers increases stepwise form chamber 22A to 22B to 22C. This prevents a situation in which the outer part of the device 10 would become to warm to function locally as a cold spot. In other words, the compartments prevent the outer part of the device 10 from becoming warmer than the outer part of the wall, thereby losing its

function as a cold spot.

Turning to figure 9B, the device can also extend completely through an outer wall 64 and inner wall 62 of a wall 12having a cavity 66. A hole is made in the insulation72 provided on the inside of the inner wall. The endplate 46 may contact a gypsum panel 70 provided against the insulation.

Turning to figure 10, it is shown that in use, air will flow through the gypsum panel 70 and through the air channels inside the end plate 46 of the device 10. In this way, moisture can be removed from inside a building. The device creates a cold spot 99 in the gypsum panel 70.

An annular insulation member 101 may be provided in order to prevent moisture coming from the inside of the building from entering the insulation 72.

Turning to figure 11, the wall 12 comprises a single wall and a layer of gypsum provided against the inside. No insulation is present. The endplate 46 engages the layer of gypsum in order to remove moisture from the inside of the building.

Turning to figure 12, an exploded view of another embodiment is shown. This embodiment has a housing comprising a first housing part 28A and a second housing part 28B. The housing parts are arranged coaxially. A ring 104 is provided between the first and second housing parts. The ring 104 may be manufactured from a heat-insulating material, for instance a suitable synthetic material, in order to provide a temperature barrier between the first and second housing parts 28A, 28B. This further aids in creating a temperature difference between the first and second housing parts and between the first and second chamber parts 22A, 22B.

The ring 104 may also provide a protection against damage. The device may provide a rigid connection between the inner wall and outer wall of a cavity wall. When the inner wall of a cavity wall moves relative to the outer wall as a result of an earthquake, other kind of shock or as a result of setting of the walls, damage may occur due to the rigid connection. When the ring 104 is manufactured from a resilient material, some relative motion between the inner wall and the outer wall is allowed, thereby avoiding damage.

The ring may further be provided with small air channels which extend in the axial direction of the ring 104 in order to allow moisture which is present in the second housing part 28A to travel

through the air channels of the ring 104 to the first housing part 28B.

The first and second housing parts have different lengths L1 and L2. This embodiment has an advantage in that with a limited number of housing parts, various combinations can be made resulting in a device 10 having each time a different total length. This makes the device 10 versatile for walls 12 having different thicknesses.

This embodiment substantially avoids any cutting of housings 28 which needs to be performed in case a wall having an unusual thickness is encountered. The cutting is generally performed on the job (also called in situ). The first housing part 28A may for instance have a length of 6 - 10 cm while the second part has a length of 2 - 6 cm. Other dimensions are also possible. It is also possible that three housing parts of a first, second and third length are provided in order to increase the versatility of the device 10. The embodiment thereby allows a faster installation process.

As required, detailed embodiments of the present invention are disclosed herein; however, it is to be understood that the disclosed embodiments are merely exemplary of the invention, which can be embodied in various forms. Therefore, specific structural and functional details disclosed herein are not to be interpreted as limiting, but merely as a basis for the claims and as a representative basis for teaching one skilled in the art to variously employ the present invention in virtually any appropriately detailed structure. Further, the terms and phrases used herein are not intended to be limiting, but rather, to provide an understandable description of the invention.

The terms "a" or "an", as used herein, are defined as one or more than one. The term plurality, as used herein, is defined as two or more than two. The term another, as used herein, is defined as at least a second or more. The terms including and/or having, as used herein, are defined as comprising (i.e., open language, not excluding other elements or steps). Any reference signs in the claims should not be construed as limiting the scope of the claims or the invention.

The mere fact that certain measures are recited in mutually different dependent claims does not indicate that a combination of these measures cannot be used to advantage.

C O N C L U S I E S

1. Inrichting (10) voor het onttrekken van vocht uit een muur (12) of soortgelijke constructie, waarbij de inrichting is geconfigureerd om in een gat (14) in de muur te worden geplaatst, waarbij de inrichting omvat:

- een voorste deel (15) dat twee openingen (16) definieert die zich in verschillende richtingen (18, 19) uitstrekken, waarbij de openingen zijn geconfigureerd om als een luchtinlaat (16A) en een luchtuitlaat (16B) te dienen,
- een kamer (22), die een inwendige ruimte definieert, waarbij een luchtstroomkanaal (24) voor een hoofdluchtstroom (26) zich door de inwendige ruimte uitstrekt tussen de luchtinlaat en de luchtuitlaat,
- een behuizing (28) die een behuizingwand (30) van de kamer vormt, waarbij de behuizing is verbonden met het voorste deel,

waarbij de hoofdluchtstroom (26) die door het luchtstroomkanaal (24) stroomt vocht uit de muur (12) afvoert,

gekenmerkt doordat

de inrichting ten minste een scheidingswand (60, 60A) heeft die de ruimte verdeelt in een eerste kamerdeel (22A) dat via de openingen (16) in open verbinding met de buitenwereld staat en een tweede kamerdeel (22B) dat in hoofdzaak gesloten is.

2. Inrichting (10) volgens conclusie 1, waarbij de scheidingswand beweegbaar is in de lengterichting van de inrichting om de grootte van het eerste en tweede kamerdeel te variëren.

3. Inrichting (10) volgens een der voorgaande conclusies, verder omvattende een tussendeel (17) dat de behuizing en het voorste deel met elkaar verbindt, waarbij het tussendeel verschillend is van het voorste deel.

4. Inrichting (10) volgens een der voorgaande conclusies, waarbij het voorste deel (15) via een losneembare koppeling (100) is verbonden met de rest van het apparaat waardoor het voorste deel (15) kan worden verwijderd door een gebruiker, waarbij in het bijzonder het voorste deel via de losmaakbare koppeling (100) is verbonden met het tussendeel.

5. Inrichting (10) volgens een der voorgaande conclusies, omvattende een luchtstroomregelaar (100) voor het variëren van de luchtstroom na de installatie van de inrichting in een muur, waarbij in het bijzonder de luchtstroomregelaar wordt gevormd door een centrale luchtgeleider (21) met een variabele positie.

6. Inrichting (10) volgens een der voorgaande conclusies, omvattende een tweede scheidingswand (60b) die samen met de eerste scheidingswand de kamer in een eerste kamerdeel (22A), een tweede kamerdeel (22B) deel en een derde kamerdeel (22C) onderverdeelt, en waarin in het bijzonder de eerste en tweede scheidingswand beweegbaar zijn.

7. Inrichting (10) volgens een der voorgaande conclusies, waarbij de behuizing (28) een eerste behuizingdeel (28A) en een tweede behuizingdeel (28B) omvat die coaxiaal zijn aangebracht, en die in het bijzonder verschillende lengtes (L1, L2) hebben.

8. Inrichting (10) volgens een der voorgaande conclusies, waarbij de behuizingwand niet alleen doorlaatbaar is voor vocht maar ook luchtkanalen omvat die zich door de behuizing heen van buiten naar binnen toe uitstrekken om een luchtstroom (42A) te laten stromen van de buitenzijde (44) van de inrichting door de behuizingwand heen tot in de kamer, en waarbij de luchtkanalen een gemiddelde diameter hebben van ten minste 0,5 mm.

9. Inrichting (10) volgens een der voorgaande conclusies, waarbij de behuizing aan een einde (48) daarvan is voorzien van een eindplaat (46), waarbij de eindplaat luchtkanalen omvat die zich door de eindwand heen uitstrekken om een tweede luchtstroom (42B) door de eindplaat te laten stromen tot in de kamer, en waarbij de luchtkanalen een gemiddelde diameter van ten minste 0,5 mm hebben en waarbij de eindplaat in het bijzonder vervaardigd is van hetzelfde materiaal als de behuizing.

10. Inrichting (10) volgens een der voorgaande conclusies, waarbij de behuizing een cirkelvormige doorsnede heeft en waarbij het voorste deel een vierkante doorsnede of een rechthoekige doorsnede heeft, en waarbij in het bijzonder het tussendeel zorgt voor een overgang van een cirkelvormige doorsnede naar een rechthoekige doorsnede.

11. Inrichting (10) volgens een der voorgaande conclusies, waarbij in vooraanzicht het voorste deel de behuizing en het cement waarmee de behuizing is verbonden met de muur overlapt.

12. Muur (12) van een huis of een soortgelijke structuur, de muur omvattende een gat (14) en een inrichting (10) volgens conclusie 1, waarbij de inrichting is gepositioneerd in het gat.

13. Muur (12) volgens conclusie 12 en omvattende een inrichting, waarbij de muur een spouwmuur is die een eerste, binnenspouwblad (62), een tweede, buitenspouwblad (64) omvat en een spouw (66) tussen het binnen- en buitenspouwblad omvat, en waarbij de

behuizingwand luchtkanalen omvat die zich door de behuizing heen uitstrekken en de spouw met de kamer verbinden, zodat tijdens gebruik een luchtstroom (42A) vanuit de spouw door de behuizingwand tot in de kamer stroomt.

14. Muur volgens conclusie 12 of 13, waarbij de inrichting een eindplaat (46) heeft aan een einde (48) daarvan, waarbij de eindplaat luchtkanalen omvat die zich door de eindwand heen uitstrekken teneinde een tweede luchtstroom (42B) te laten stromen door de eindplaat in de kamer, en waarbij de luchtkanalen een gemiddelde diameter hebben van ten minste 0,5 mm en waarbij de eindplaat in het bijzonder vervaardigd is van hetzelfde materiaal als de behuizing, waarbij een isolatielaag (72) is verbonden met de muur (12), waarbij de isolatie een opening (75) nabij een uiteinde (48) van het apparaat heeft, zodat vochtige lucht door de opening in de isolatie kan stromen en verder als een luchtstroom door de eindplaat en tot in de kamer kan stromen.

15. Muur volgens conclusie 14, waarbij een paneel (70) zoals een gipspaneel omvattende de isolatielaag (72) is verbonden met de binnenzijde (74) van de muur (12), waarbij de isolatie in contact is met de muur, waarbij de inrichting zich uitstrekt door de muur, waarbij de opening wordt verschaft in de isolatie zodat een uiteinde (48) van het apparaat rechtstreeks in contact is met het paneel (70).

16. Werkwijze voor het verbeteren van de vochtsituatie in een huis of een soortgelijke constructie, waarbij de werkwijze omvat:
- het creëren van een gat (14) in een muur (12) van het huis,
- het inbrengen van de inrichting volgens conclusie 1 in het gat,
- het verwijderen van vocht uit de muur.

17. Werkwijze volgens conclusie 16, waarbij de inrichting eerst wordt geïnstalleerd met een scheidingswand in een eerste positie of zonder scheidingswand, en waarbij na een bepaalde periode de scheidingswand wordt verplaatst naar een tweede positie, verwijderd of wordt toegevoegd, zodanig dat in de laatstgenoemde periode de inrichting een ander vocht-verwijderend vermogen heeft dan in de eerste periode.

18. Werkwijze volgens conclusie 16 of 17, waarbij de inrichting eerst wordt geïnstalleerd met een eerste scheidingswand in een eerste positie en een tweede scheidingswand in een tweede positie, en waarbij na een bepaalde periode ten minste een scheidingswand wordt verplaatst of verwijderd.

19. Werkwijze volgens een van de voorgaande conclusies werkwijze, waarbij de inrichting (10) een tussendeel (17) heeft dat de behuizing en het voorste deel met elkaar verbindt, waarbij het tussendeel verschillend is van het voorste deel, waarbij de behuizing is vervaardigd van een keramisch materiaal en waarbij het voorste deel en het tussendeel zijn vervaardigd uit kunststof, en waarbij de behuizing met cement is bevestigd aan de muur en waarbij het tussendeel via een andere verbindingsmethode is verbonden met de behuizing.

20. Werkwijze volgens een van de voorgaande conclusies werkwijze, waarbij het voorste deel via een losneembare koppeling (100) is verbonden met de rest van het apparaat waardoor het voorste deel (15) kan worden verwijderd door een gebruiker, waarbij in het bijzonder het voorste deel via de losmaakbare koppeling (100) is verbonden met het tussendeel, en waarbij het voorste deel van tijd tot tijd wordt verwijderd voor:
- inspectie van het inwendige,
- reinigen van het inwendige en / of
- herpositionering van de ten minste ene scheidingswand in de kamer.

21. Werkwijze volgens een van de voorgaande werkwijzeconclusies, waarbij de inrichting (10) een luchtstroomregelaar (100) heeft voor het variëren van de luchtstroom na de installatie van de inrichting in een muur, waarbij in het bijzonder de luchtstroomregelaar wordt gevormd door een centrale luchtgeleider (21) met een variabele positie, en waarbij na een bepaalde periode de luchtstroom wordt aangepast met de luchtstroomregelaar voor het vergroten of verkleinen van de vochtverwijderende capaciteit.

22. Werkwijze volgens een der voorgaande conclusies, waarbij in een inrichting volgens conclusie 13 is voorzien, en waarbij een luchtstroom (42A) door de luchtkanalen in de behuizingwand van de spouw naar de kamer stroomt, waardoor vocht uit de spouw wordt verwijderd.

23. Werkwijze volgens een van de voorgaande werkwijzeconclusies, waarbij de behuizing is voorzien van een eindplaat (46), waarbij de eindplaat luchtkanalen omvat om een tweede luchtstroom (42B) te laten stromen van de buitenkant (44) van de inrichting door de eindplaat heen naar de kamer, waarbij een muur een paneel (14) omvat, met name een gipspaneel, dat is verbonden met de binnenzijde (74) van de muur (12), waarbij de opening (14) zich helemaal door de muur (12) heen uitstrekt, waarbij de eindplaat (46) van het apparaat rechtstreeks in contact is met het paneel, en waarbij vocht wordt verwijderd uit het paneel door de tweede luchtstroom die door de eindplaat (46) stroomt.

24. Werkwijze volgens conclusie 23, waarbij het paneel (14), met name een gipspaneel, een isolatielaag (72) omvat die is verbonden met de binnenzijde (74) van de muur (12), waarbij bij de eindplaat (46) in een opening (75) in de isolatie (72) is voorzien, zodat de eindplaat (46) van het apparaat rechtstreeks in contact is met het paneel, en waarbij vocht uit het paneel wordt verwijderd door een tweede luchtstroom die door de eindplaat heen stroomt (46).

25. Inrichting (10) voor het onttrekken van vocht uit een muur (12) of soortgelijke constructie, waarbij de inrichting is geconfigureerd om in een gat (14) in de muur te worden geplaatst, waarbij de inrichting omvat:

- een voorste deel (15) dat twee openingen (16) definieert die zich in verschillende richtingen (18, 19) uitstrekken, waarbij de openingen zijn geconfigureerd om als een luchtinlaat (16A) en een luchtuitlaat (16B) te dienen,
- een kamer (22), die een binnenruimte definieert, waarbij een luchtstroomkanaal (24) voor een hoofdluchtstroom (26) zich door de inwendige ruimte uitstrekt tussen de luchtinlaat en de luchtuitlaat,
- een behuizing (28) die een behuizingwand (30) van de kamer vormt, waarbij de behuizing is verbonden met het voorste deel,

waarbij de hoofdluchtstroom (26) die door het luchtstroomkanaal (24) stroomt vocht uit de muur (12) afvoert, waarbij de inrichting een of meer van de kenmerken van conclusies 2 - 11 heeft.

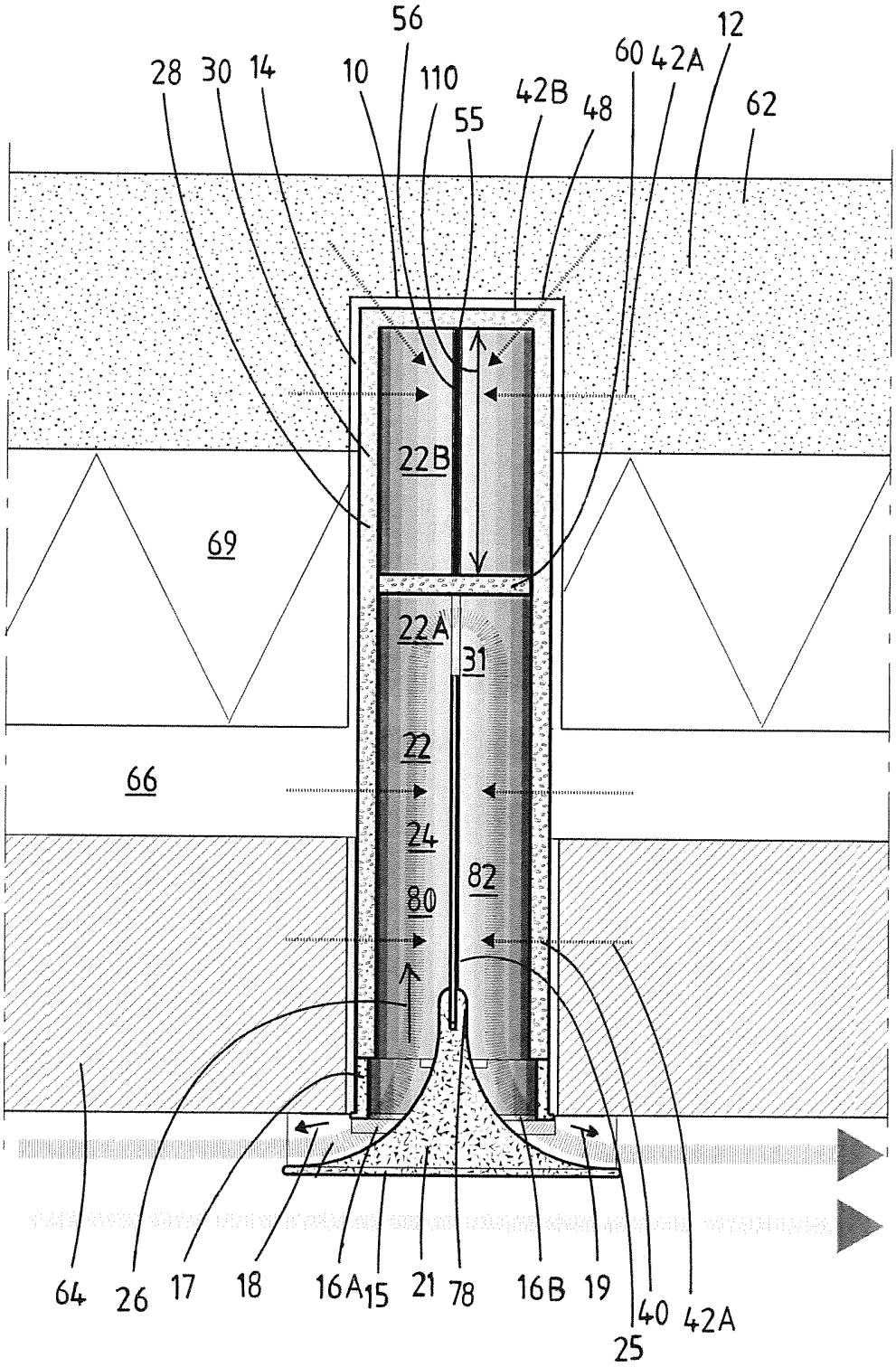
56
12
28
30
14
10
110
60
42A
42B
48
55
62
22B
69
22A
31
22
66
24
82
80
64
26
17
18
16A
15
21
78
16B
19
40
42A
25

Fig.1

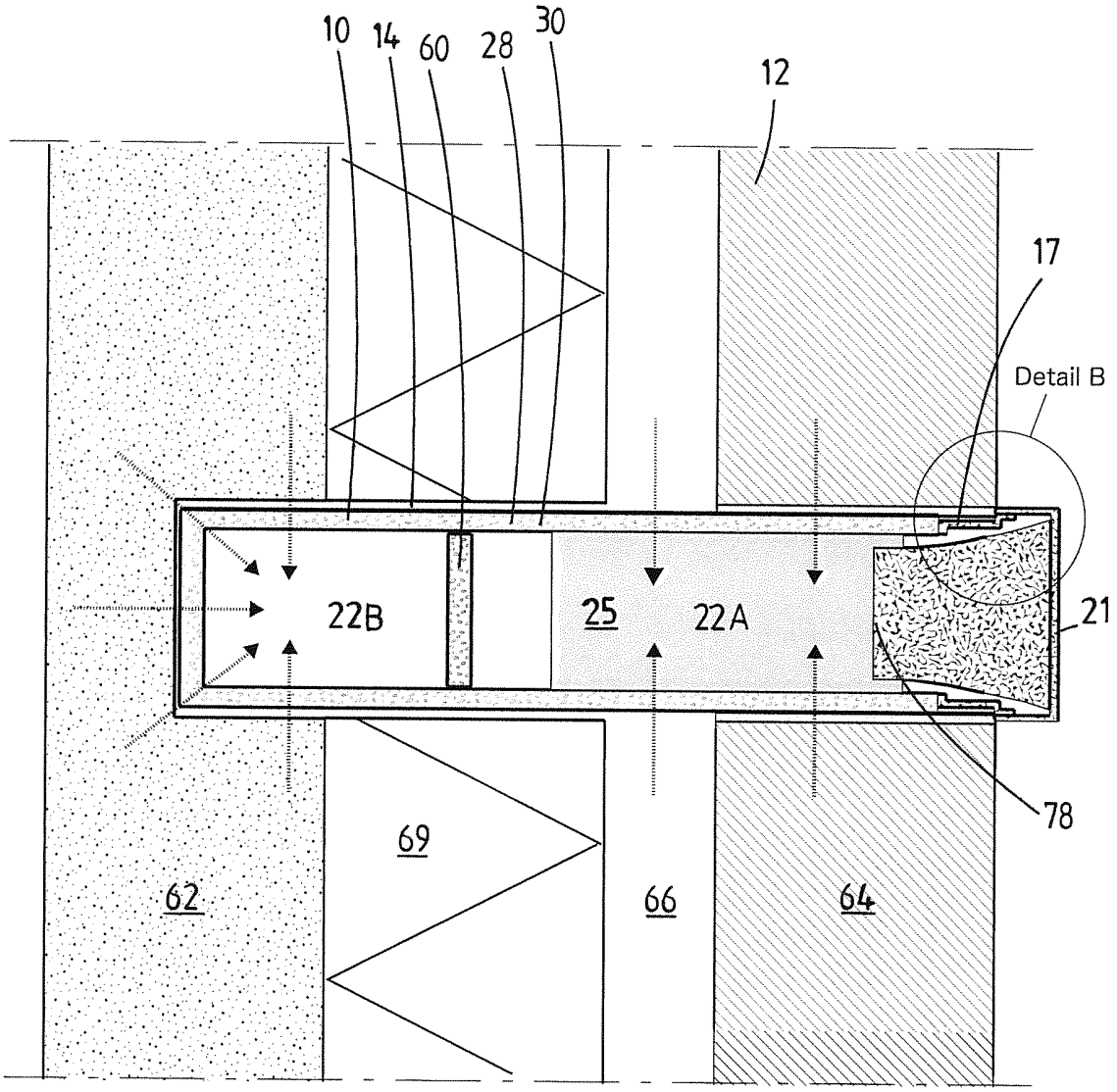

Fig.2

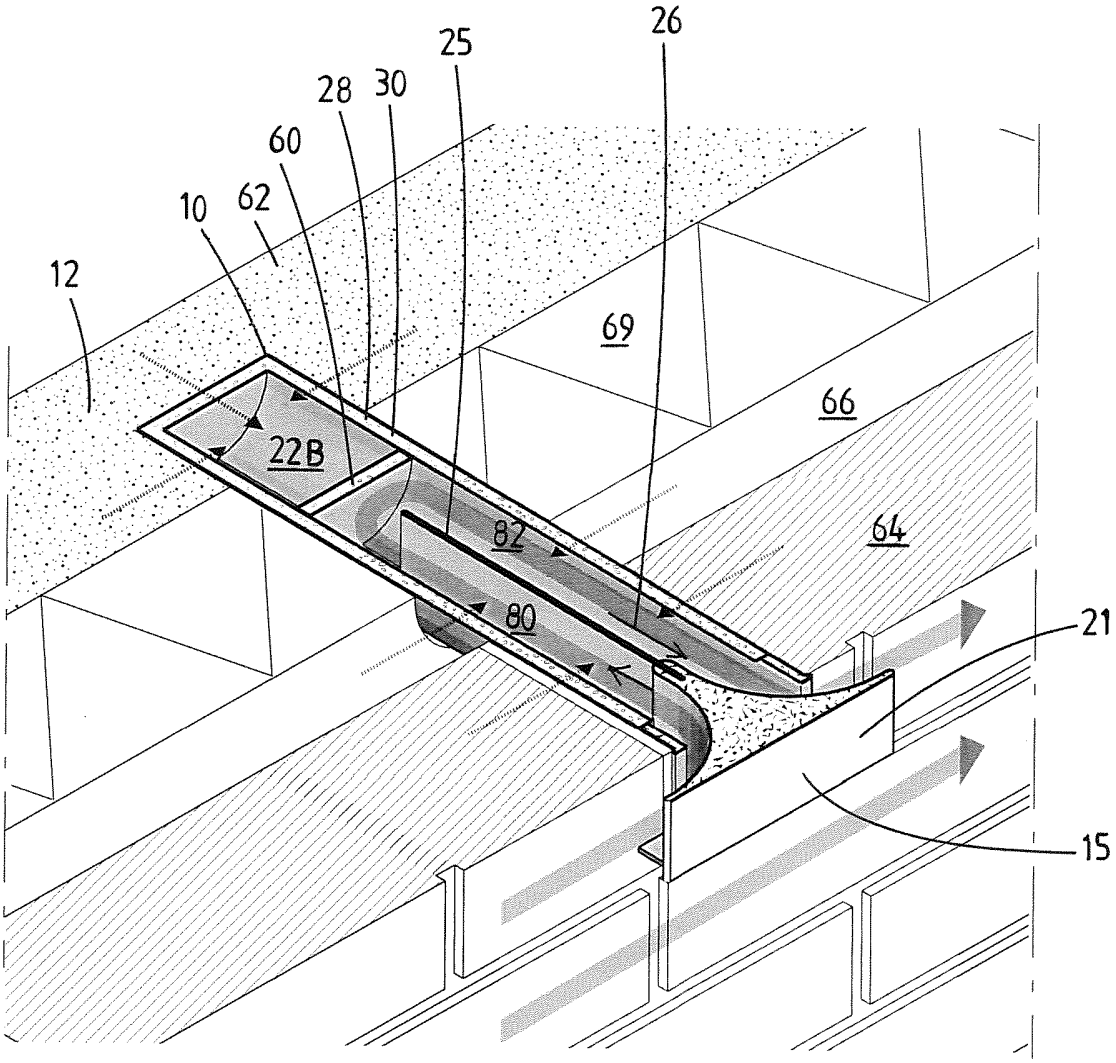

Fig.3

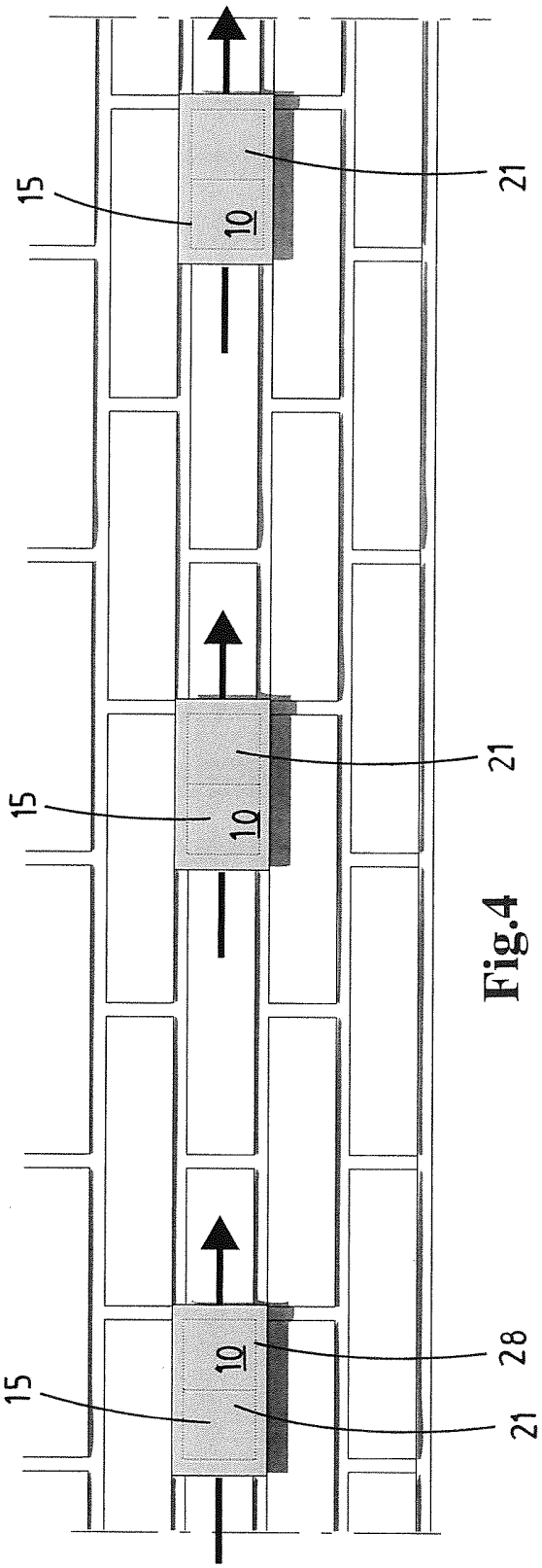

Fig.4

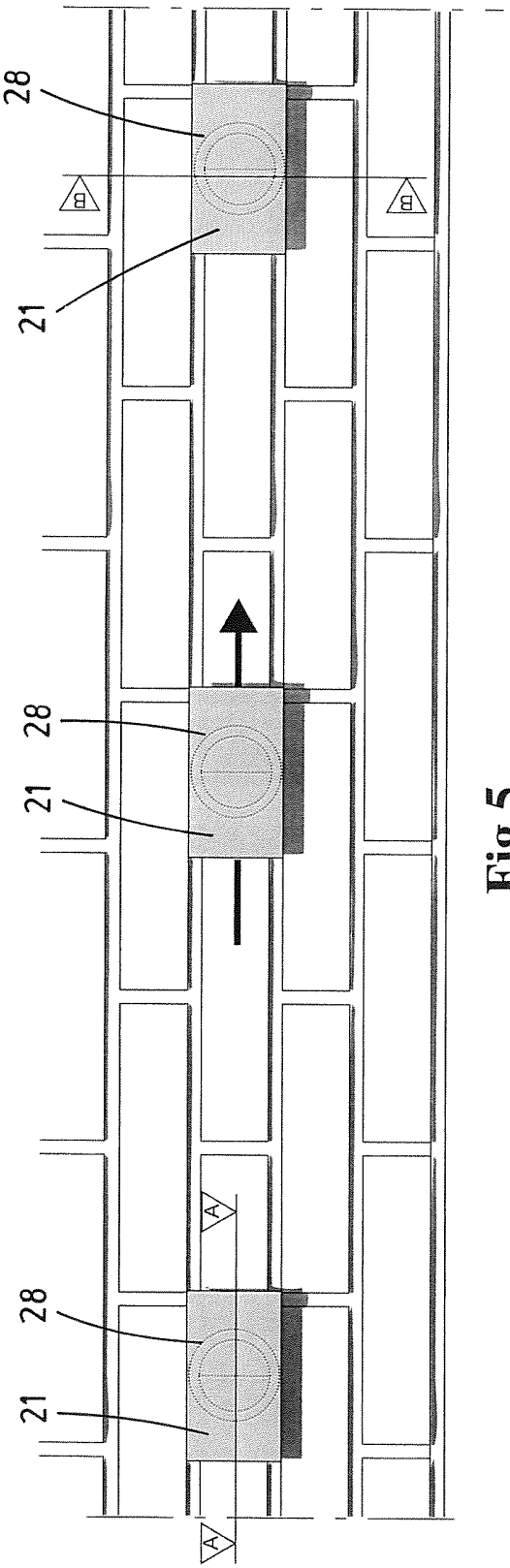

Fig.5

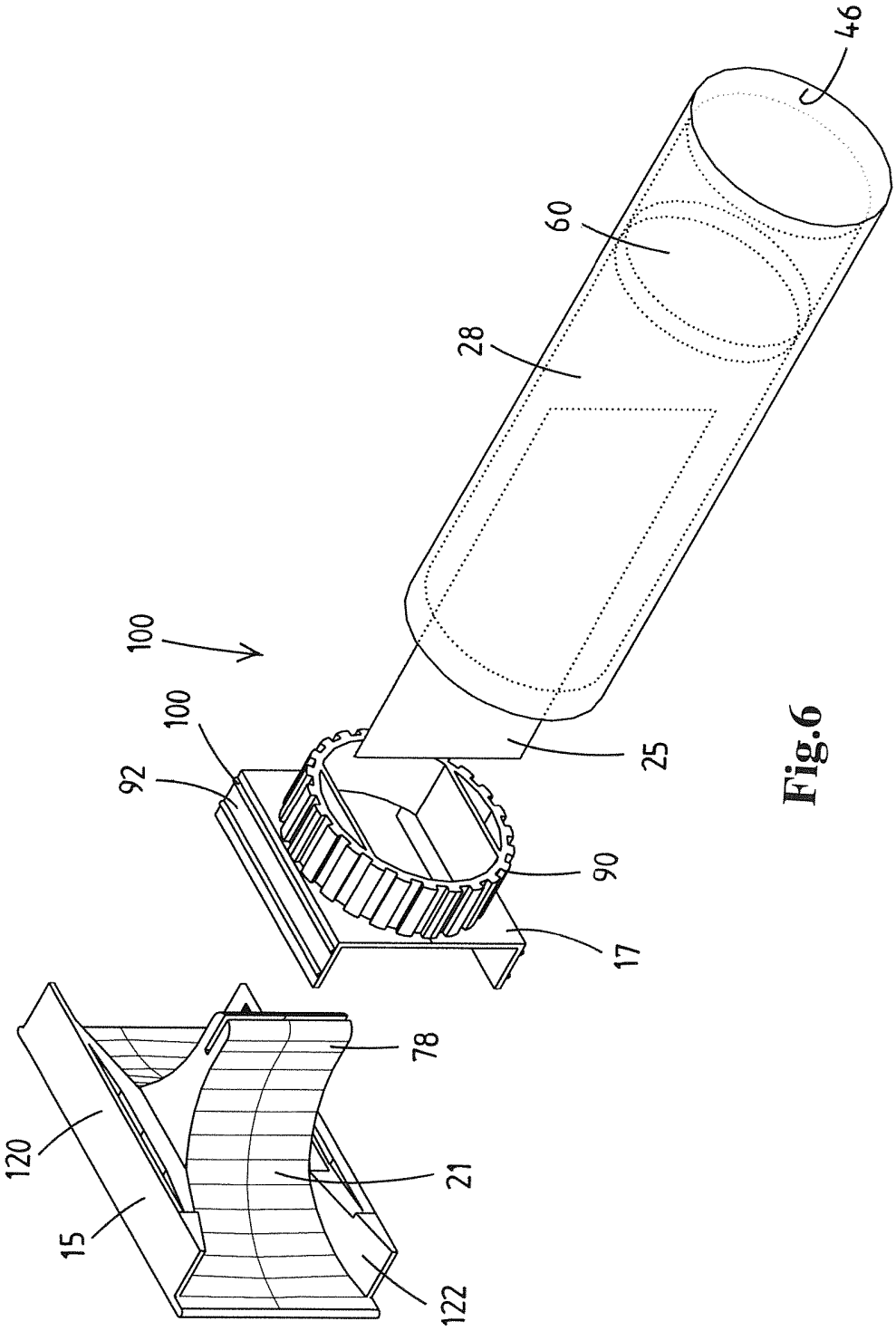

Fig.6

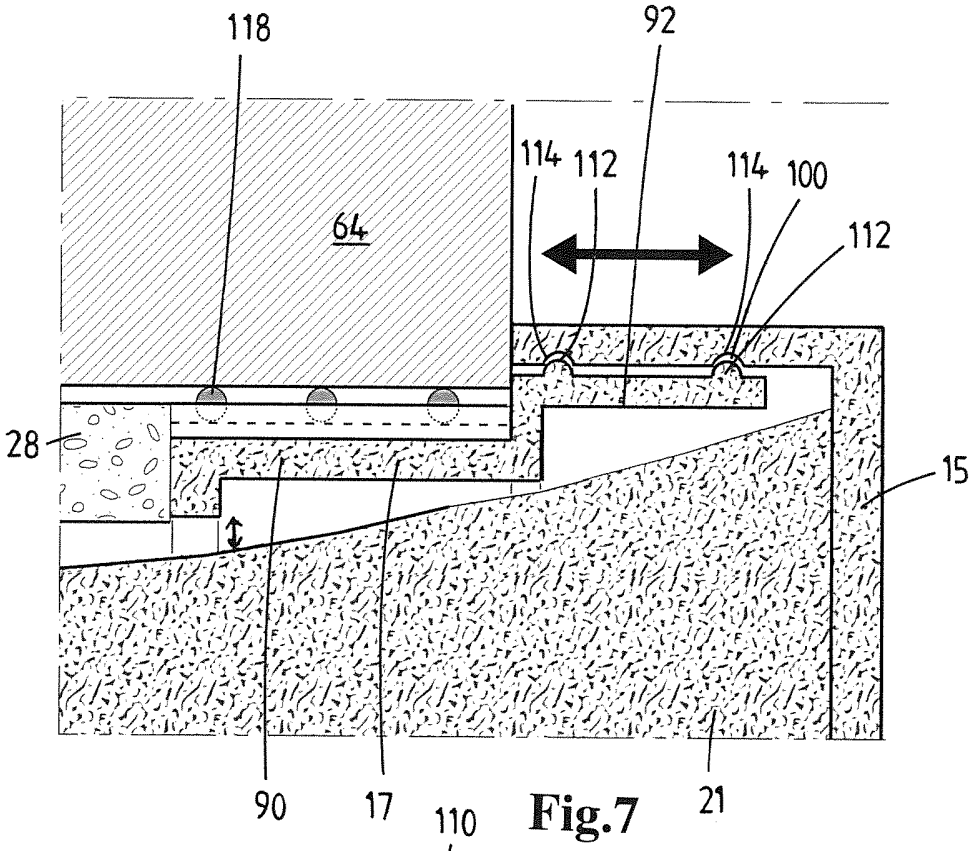
118
92
114
112
114
100
112
64
28
15
90
17
21

Fig.7

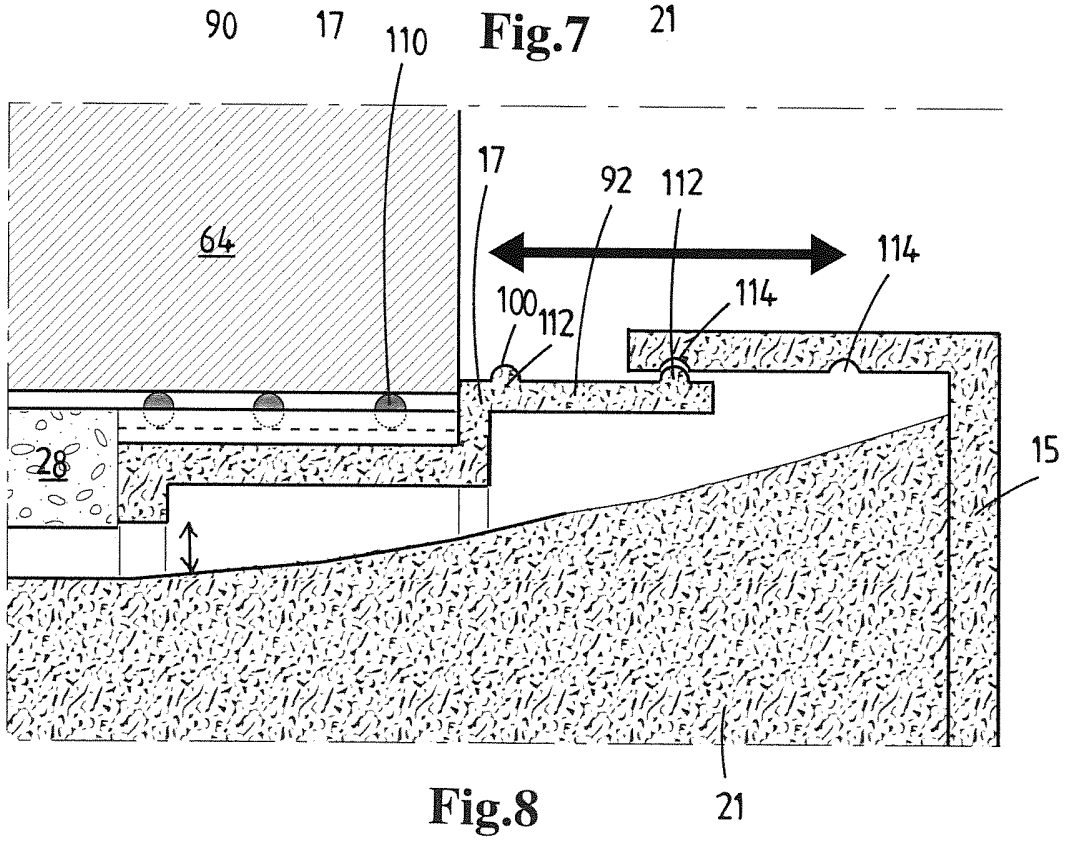
110
17
92
112
114
100
112
114
64
28
15
21

Fig.8

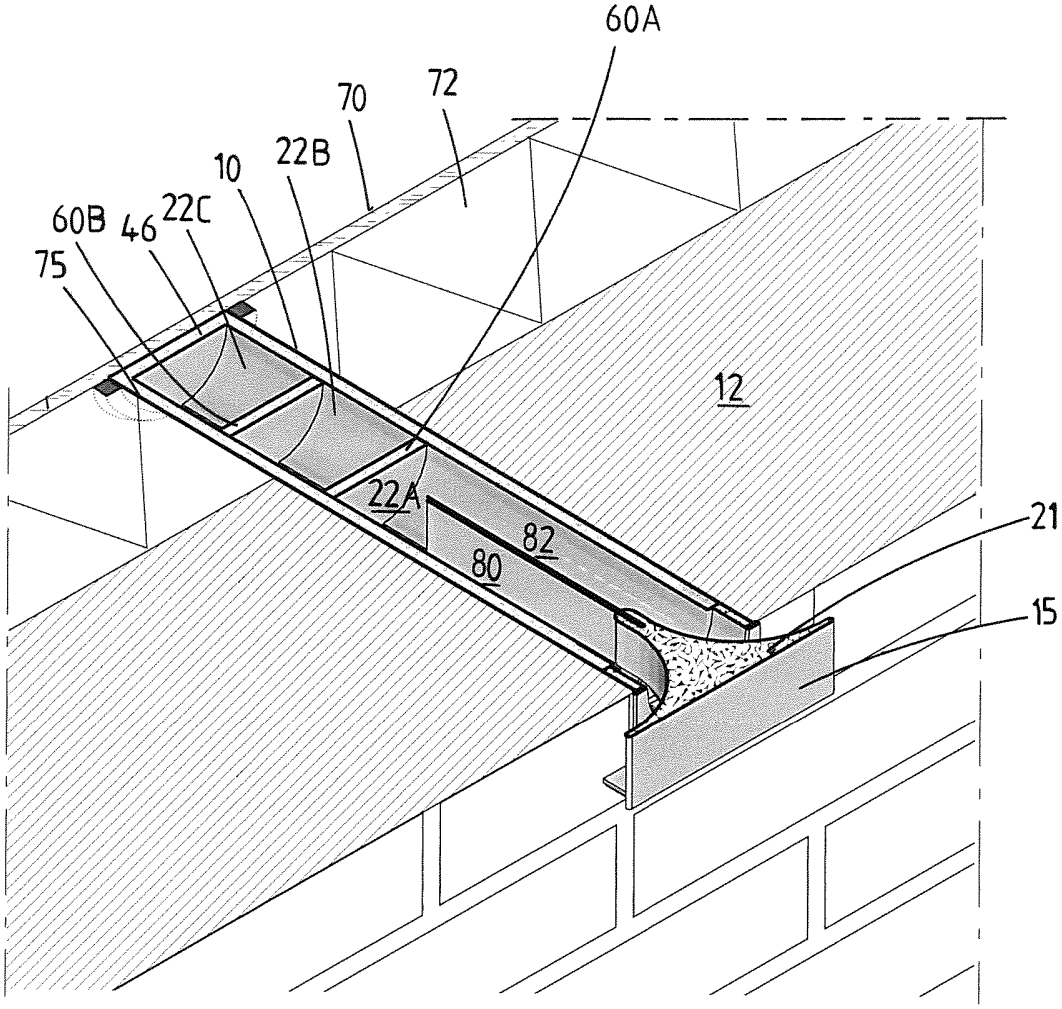

Fig.9a

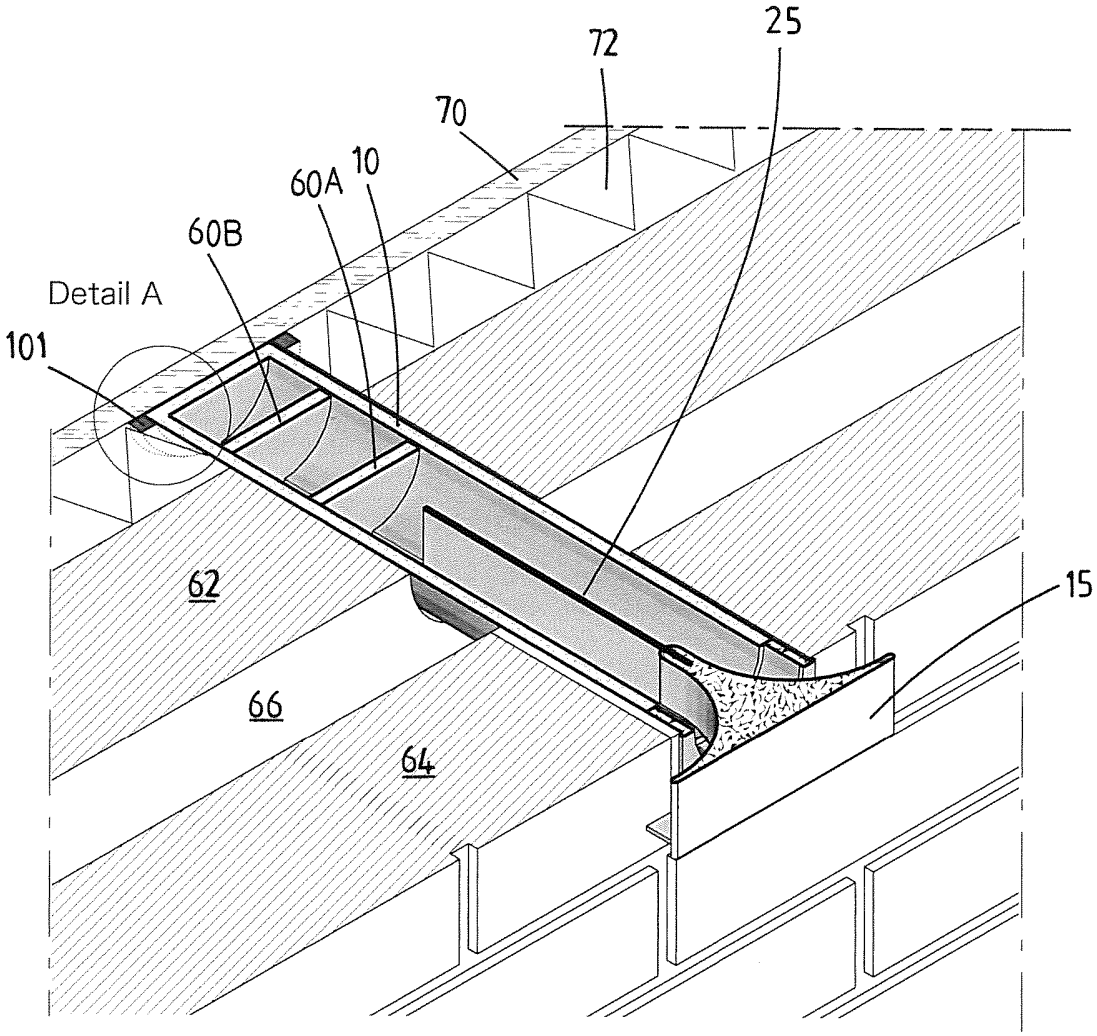

Fig.9b

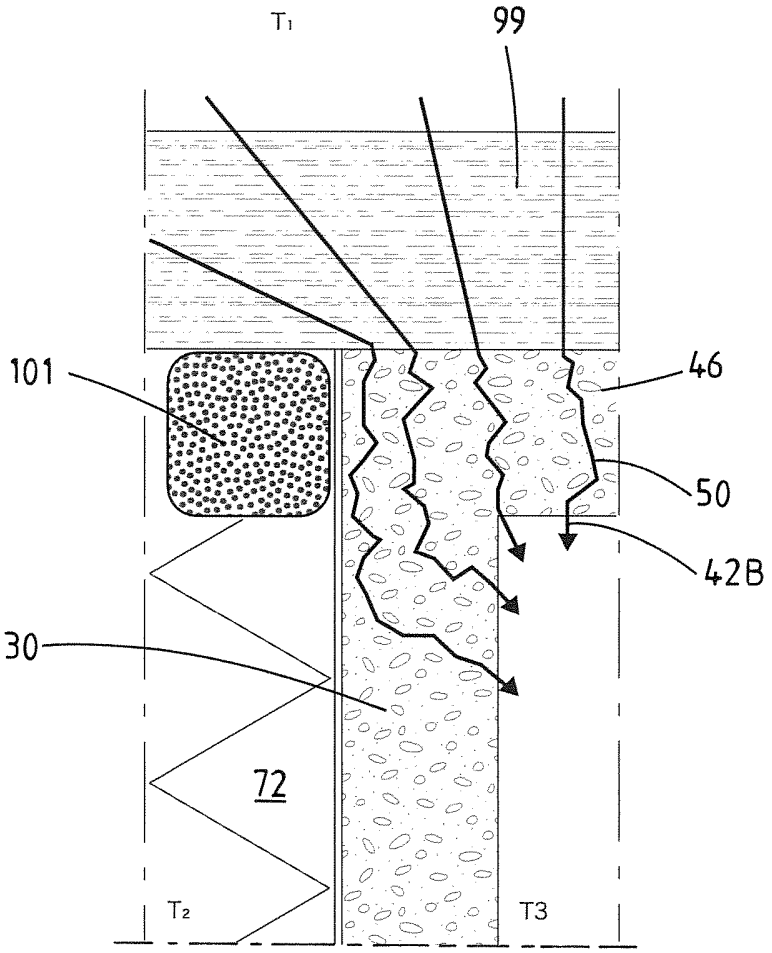

Fig.10

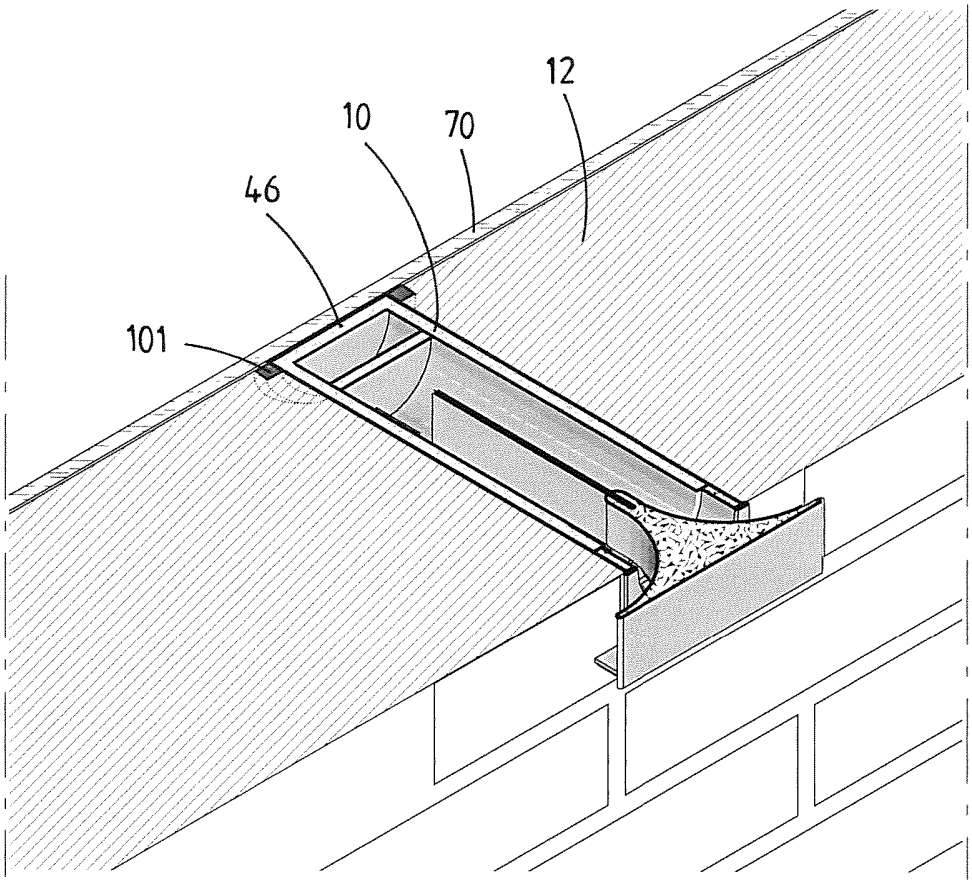

Fig.11

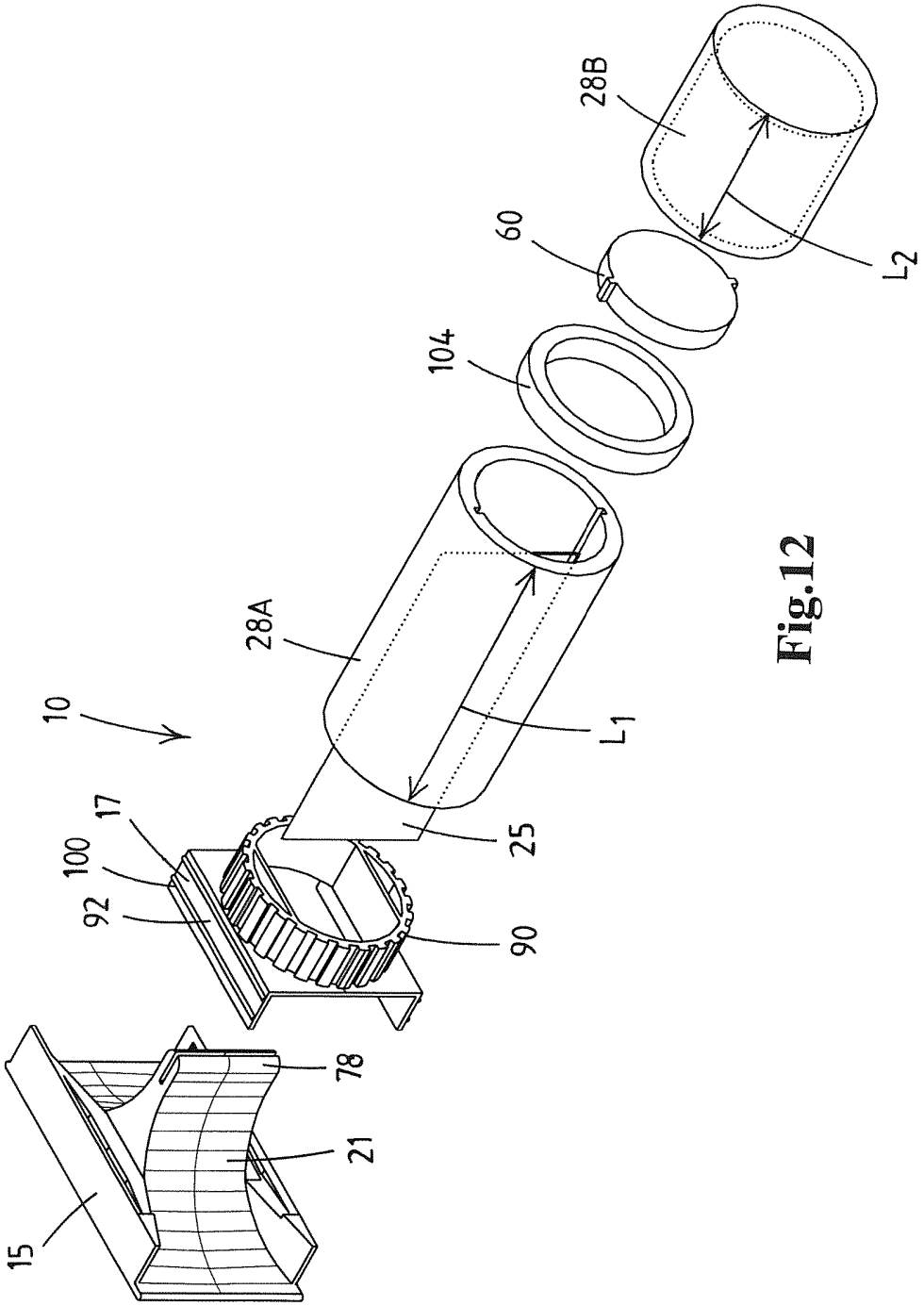

Fig.12

Agentschap NL
Ministerie van Economische Zaken

OCTROOIAANVRAAG NR.:
NO 138887
NL 2012035

ONDERZOEKSRAPPORT

BETREFFENDE HET RESULTAAT VAN HET ONDERZOEK NAAR DE STAND VAN DE TECHNIEK

RELEVANTE LITERATUUR

Categorie[1]	Literatuur met, voor zover nodig, aanduiding van speciaal van belang zijnde tekstgedeelten of figuren.	Van belang voor conclusie(s) nr:	Classificatie (IPC)
X	FR 2 920 796 A1 (ALIZE ADVANCE SARL SOC RESPONS [FR]) 13 maart 2009 (2009-03-13) * bladzijde 3, regel 33 - bladzijde 8, regel 9; figuren 1-5 * -----	1,3-24	INV. E04B1/70
X	EP 0 407 290 A1 (FUMISTERIE IND ET ENG [FR]) 9 januari 1991 (1991-01-09) * kolom 4, regel 15 - regel 42; figuur 3 * -----	1,2,12, 16,19,25	
A,D	EP 0 829 587 A1 (SCHRIJVER SYSTEEM VOCHTBESTRIJ [BE]) 18 maart 1998 (1998-03-18) * het gehele document * -----	1-25	

Onderzochte gebieden van de techniek

E04B

Indien gewijzigde conclusies zijn ingediend, heeft dit rapport betrekking op de conclusies ingediend op:

Plaats van onderzoek:	Datum waarop het onderzoek werd voltooid:	Bevoegd ambtenaar:
's-Gravenhage	25 augustus 2014	Zuurveld, Gerben

[1] CATEGORIE VAN DE VERMELDE LITERATUUR

X: de conclusie wordt als niet nieuw of niet inventief beschouwd ten opzichte van deze literatuur
Y: de conclusie wordt als niet inventief beschouwd ten opzichte van de combinatie van deze literatuur met andere geciteerde literatuur van dezelfde categorie, waarbij de combinatie voor de vakman voor de hand liggend wordt geacht
A: niet tot de categorie X of Y behorende literatuur die de stand van de techniek beschrijft
O: niet-schriftelijke stand van de techniek
P: tussen de voorrangsdatum en de indieningsdatum gepubliceerde literatuur
T: na de indieningsdatum of de voorrangsdatum gepubliceerde literatuur die niet bezwarend is voor de octrooiaanvrage, maar wordt vermeld ter verheldering van de theorie of het principe dat ten grondslag ligt aan de uitvinding
E: eerdere octrooi(aanvrage), gepubliceerd op of na de indieningsdatum, waarin dezelfde uitvinding wordt beschreven
D: in de octrooiaanvrage vermeld
L: om andere redenen vermelde literatuur
&: lid van dezelfde octrooifamilie of overeenkomstige octrooipublicatie

EOB FORM 02.83 (P0414B)

AANHANGSEL BEHORENDE BIJ HET RAPPORT BETREFFENDE HET ONDERZOEK NAAR DE STAND VAN DE TECHNIEK, UITGEVOERD IN DE OCTROOIAANVRAGE NR.

NO 138887
NL 2012035

Het aanhangsel bevat een opgave van elders gepubliceerde octrooiaanvragen of octrooien (zogenaamde leden van dezelfde octrooifamilie), die overeenkomen met octrooischriften genoemd in het rapport.
De opgave is samengesteld aan de hand van gegevens uit het computerbestand van het Europees Octrooibureau per
De juistheid en volledigheid van deze opgave wordt noch door het Europees Octrooibureau, noch door het Bureau voor de Industriële eigendom gegarandeerd; de gegevens worden verstrekt voor informatiedoeleinden.

25-08-2014

In het rapport genoemd octrooigeschrift		Datum van publicatie	Overeenkomend(e) geschrift(en)			Datum van publicatie
FR 2920796	A1	13-03-2009	FR	2920796	A1	13-03-2009
			WO	2009044047	A2	09-04-2009
EP 0407290	A1	09-01-1991	DE	69000377	D1	12-11-1992
			DE	69000377	T2	06-05-1993
			EP	0407290	A1	09-01-1991
			ES	2036098	T3	01-05-1993
			FR	2649431	A1	11-01-1991
EP 0829587	A1	18-03-1998	AT	234398	T	15-03-2003
			BE	1010625	A3	03-11-1998
			DE	69719643	D1	17-04-2003
			DE	69719643	T2	30-10-2003
			EP	0829587	A1	18-03-1998
			ES	2196254	T3	16-12-2003
			PT	829587	E	31-07-2003

Algemene informatie over dit aanhangsel is gepubliceerd in de 'Official Journal' van het Europees Octrooibureau nr 12/82 blz 448 ev

SCHRIFTELIJKE OPINIE

DOSSIER NUMMER	INDIENINGSDATUM	VOORRANGSDATUM	AANVRAAGNUMMER
NO138887	30.12.2013		NL2012035

CLASSIFICATIE
INV. E04B1/70

AANVRAGER
Schrijver Vochtbestrijding B.V.

Deze schriftelijke opinie bevat een toelichting op de volgende onderdelen:

- ☒ Onderdeel I Basis van de schriftelijke opinie
- ☐ Onderdeel II Voorrang
- ☐ Onderdeel III Vaststelling nieuwheid, inventiviteit en industriële toepasbaarheid niet mogelijk
- ☐ Onderdeel IV De aanvraag heeft betrekking op meer dan één uitvinding
- ☒ Onderdeel V Gemotiveerde verklaring ten aanzien van nieuwheid, inventiviteit en industriële toepasbaarheid
- ☐ Onderdeel VI Andere geciteerde documenten
- ☐ Onderdeel VII Overige gebreken
- ☐ Onderdeel VIII Overige opmerkingen

DE BEVOEGDE AMBTENAAR
Zuurveld, Gerben

Aanvraag nr.:

SCHRIFTELIJKE OPINIE

NL2012035

Onderdeel I Basis van de Schriftelijke Opinie

1. Deze schriftelijke opinie is opgesteld op basis van de meest recente conclusies ingediend voor aanvang van het onderzoek.

2. Met betrekking tot **nucleotide en/of aminozuur sequenties** die genoemd worden in de aanvraag en relevant zijn voor de uitvinding zoals beschreven in de conclusies, is dit onderzoek gedaan op basis van:

   a. type materiaal:

   ☐ sequentie opsomming

   ☐ tabel met betrekking tot de sequentie lijst

   b. vorm van het materiaal:

   ☐ op papier

   ☐ in elektronische vorm

   c. moment van indiening/aanlevering:

   ☐ opgenomen in de aanvraag zoals ingediend

   ☐ samen met de aanvraag elektronisch ingediend

   ☐ later aangeleverd voor het onderzoek

3. ☐ In geval er meer dan één versie of kopie van een sequentie opsomming of tabel met betrekking op een sequentie is ingediend of aangeleverd, zijn de benodigde verklaringen ingediend dat de informatie in de latere of additionele kopieën identiek is aan de aanvraag zoals ingediend of niet meer informatie bevatten dan de aanvraag zoals oorspronkelijk werd ingediend.

4. Overige opmerkingen:

SCHRIFTELIJKE OPINIE

Onderdeel V Gemotiveerde verklaring ten aanzien van nieuwheid, inventiviteit en industriële toepasbaarheid

1. Verklaring

Nieuwheid	Ja:	Conclusies	2, 6, 13, 15, 17-19, 22, 24, 25
	Nee:	Conclusies	1, 3-5, 7-12, 14, 16, 20, 21, 23
Inventiviteit	Ja:	Conclusies	
	Nee:	Conclusies	1-25
Industriële toepasbaarheid	Ja:	Conclusies	1-25
	Nee:	Conclusies	

2. Citaties en toelichting:

Zie aparte bladzijde

Re Item V

Reasoned statement with regard to novelty, inventive step or industrial applicability; citations and explanations supporting such statement

1 Reference is made to the following documents:

D1 FR 2 920 796 A1 (ALIZE ADVANCE SARL SOC RESPONS [FR]) 13 maart 2009 (2009-03-13)

D2 EP 0 407 290 A1 (FUMISTERIE IND ET ENG [FR]) 9 januari 1991 (1991-01-09)

D3 EP 0 829 587 A1 (SCHRIJVER SYSTEEM VOCHTBESTRIJ [BE]) 18 maart 1998 (1998-03-18)

2 The present application does not meet the criteria of patentability, because the subject-matter of claim 1 is not new.

2.1 Document D1 discloses, cf. the cited passages in the search report:

"een inrichting (1) voor het onttrekken van vocht uit een muur (3) of soortgelijke constructie, waarbij de inrichting is geconfigureerd om in een gat (14) in de muur te worden geplaatst, waarbij de inrichting omvat:

- een voorste deel (8, fig. 1) dat twee openingen (24, 26, 31, fig. 1, 2) definieert die zich in verschillende richtingen (frontal, see fig. 2, lateral via opening 31, see fig. 1) uitstrekken, waarbij de openingen zijn geconfigureerd om als een luchtinlaat en een luchtuitlaat (see fig. 2) te dienen,

- een kamer (see fig. 2), die een inwendige ruimte definieert, waarbij een luchtstroomkanaal voor een hoofdluchtstroom zich door de inwendige ruimte uitstrekt tussen de luchtinlaat en de luchtuitlaat,

- een behuizing (13, see fig. 1, 2) die een behuizingwand van de kamer vormt, waarbij de behuizing is verbonden met het voorste deel,waarbij de hoofdluchtstroom die door het luchtstroomkanaal stroomt vocht uit de muur afvoert, waarbij de inrichting ten minste een scheidingswand (frontal wall of "logement" 44) heeft die de ruimte verdeelt in een eerste kamerdeel (see fig. 2) dat via de openingen in open verbinding met de buitenwereld staat en een tweede kamerdeel (44) dat in hoofdzaak gesloten is."

Therefore all the features of claim 1 are known from document D1.

2.2 The subject-matter of corresponding independent method claim 16 is, mutatis mutandis, also known from this document, and therefore not novel either.

2.3 It is to be noted that claim 1 lacks essential features, since the features of claim 1 alone do not enable the skilled person to carry out the invention and thereby solving the problems as described on pages 2 and further of the description, i.e. to change the moisture removing capacity of the device. The features essential for carrying out the invention are formulated in dependent claim 2. The features of claim 2 should therefore haven been included in claim 1.

However, this would not have rendered claim 1 inventive, since the features of claim 2 are already known from document D2 for solving the same problem as mentioned in the application, cf. the cited passages in the search report. This document discloses all of the features of claims 1 and 2, apart from the feature that the "openingen zich in verschillende richtingen uitstrekken" (note that this feature is well-known from the prior art, cf. cited document D3). This feature however has no technical relation with the feature of changing the volumes of the first and second chambers. The subject-matter of claims 1, 2 and corresponding method claims 16 and 25 can therefore not be considered as involving an inventive step in view of this document.

3 Dependent claims 3-15, 17-24 do not contain any features which, in combination with the features of any claim to which they refer, meet the requirements of novelty or inventive step, see documents D1 and D2 and the cited passages in the search report:

3.1 Document D1 discloses at least the features of claims 3 to 5, 7 to 12, 14, 20, 21 and 23, cf. the cited passages in the search report. Therefore the subject-matter of said claims is not novel in view of this document.

3.2 Document D2 discloses, next to the features of claim 2, at least the features of claims 12 and 19, cf. the cited passages in the search report. Therefore the subject-matter of said claims cannot be considered inventive in view of this document.

3.3 The features of claims 6, 13, 15, 17 to 19, 22 and 24 are merely some of several straightforward possibilities from which the skilled person would select, in accordance with circumstances, without the exercise of inventive skill. The subject-matter of said claims does therefore not involve an inventive step.